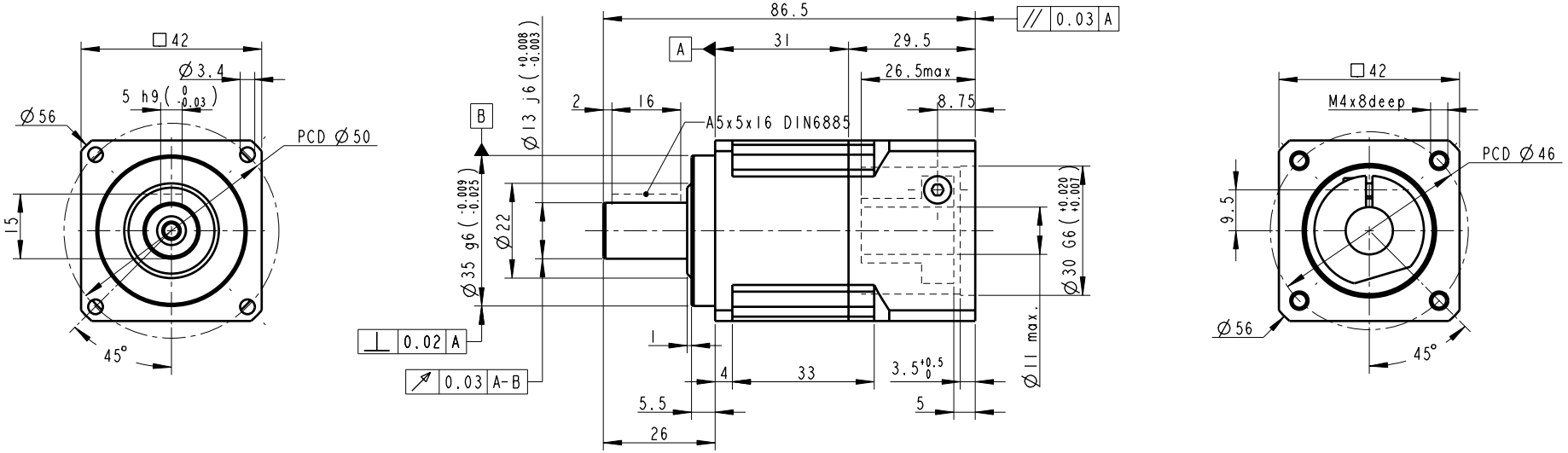

Old Part No. AB0421-P4010102

INERTIA: 0.03~0.03kg-cm^2
MASS: 0.5kg

SHAFT OPTION S1: SMOOTH OUTPUT SHAFT(STANDARD)
SHAFT OPTION S2: OUTPUT SHAFT WITH KEYWAY
REDUCED BACKLASH: 3arcmin
STANDARD BACKLASH: 5arcmin

BUSHING SUPPLIED WHEN MOTOR SHAFT DIAMETER SMALL THAN Ø11

PART NO. AB0421-P0401100102 AB042-1, AD-W42-M42-2		APEX DYNAMICS, INC.
APPROVALS	DATE	TITLE AB042 1 STAGE, RATIO= 3~10 AND STANDARD FLANGE MOUNTING
DRAWN Cindy	06-Oct-08	DWG NO. AB0421-P0401100102
CHECKED		
APPROVED		SIZE A3 / SCALE 1:1 / REV 2.0