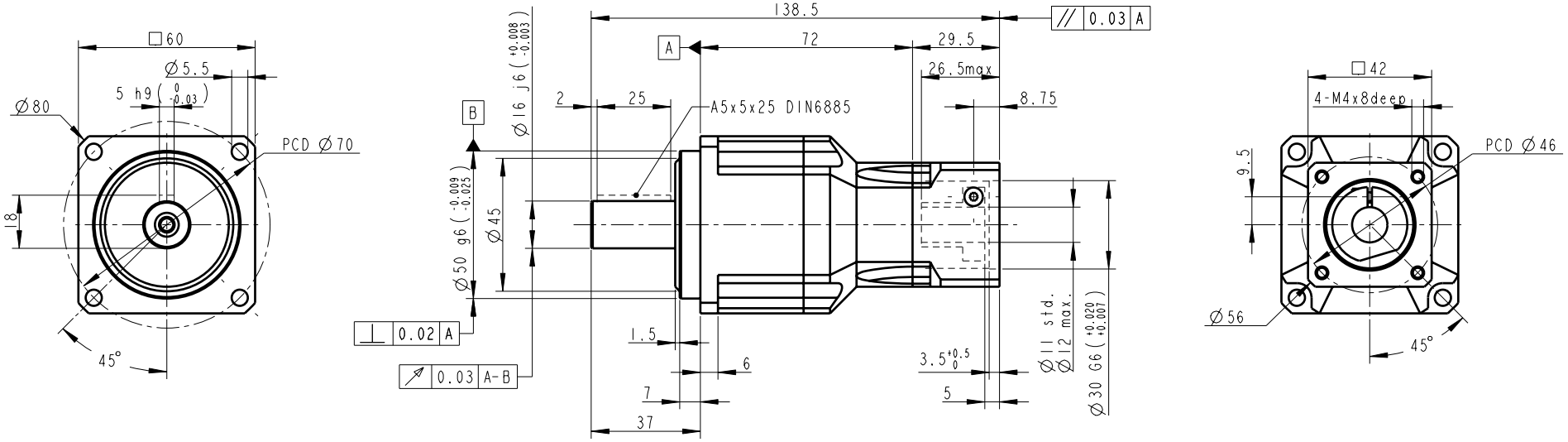

Old Part No. AB0602-P4010102

INERTIA: 0.03~0.03kg-cm^2
MASS: 1.5kg

SHAFT OPTION S1: SMOOTH OUTPUT SHAFT(STANDARD)
SHAFT OPTION S2: OUTPUT SHAFT WITH KEYWAY
REDUCED BACKLASH<= 5 arcmin
STANDARD BACKLASH<= 7 arcmin

BUSHING SUPPLIED WHEN MOTOR SHAFT DIAMETER SMALL THAN Ø12

PART NO. AB0602-P0401100102 AB060-2, AD-W42-M42-2		APEX DYNAMICS, INC.
APPROVALS	DATE	TITLE AB060 2 STAGES, RATIO= 15~100 AND STANDARD FLANGE MOUNTING
DRAWN Cindy	21-Oct-08	DWG NO. AB0602-P0401100102
CHECKED		
APPROVED		SIZE A2 / SCALE 1:1 / REV 2.0