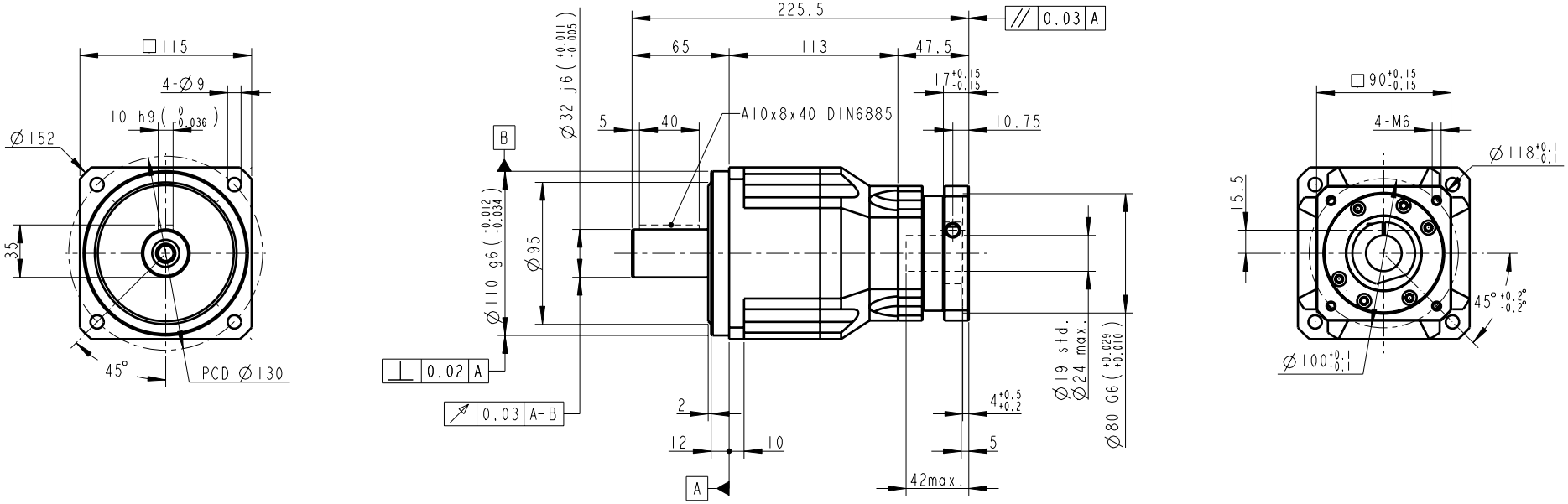

Old Part No. AB1152-P4130303

INERTIA: 0.44~0.47kg-cm^2
MASS: 9kg

SHAFT OPTION S1: SMOOTH OUTPUT SHAFT(STANDARD)
SHAFT OPTION S2: OUTPUT SHAFT WITH KEYWAY
MICRO BACKLASH<= 3 arcmin
REDUCED BACKLASH<= 5 arcmin
STANDARD BACKLASH<= 7 arcmin

BUSHING SUPPLIED WHEN MOTOR SHAFT DIAMETER SMALL THAN Ø24

PART NO. AB1152-P0403300603 AB115-2, AD-P90-M90-3		APEX DYNAMICS, INC.
APPROVALS	DATE	TITLE AB115 2 STAGES, RATIO= 15~100 AND MOTOR FLANGE MOUNTING
DRAWN Cindy	24-Aug-08	DWG NO. AB1152-P0403300603
CHECKED		
APPROVED		SIZE A0 / SCALE 1:1 / REV 2.0