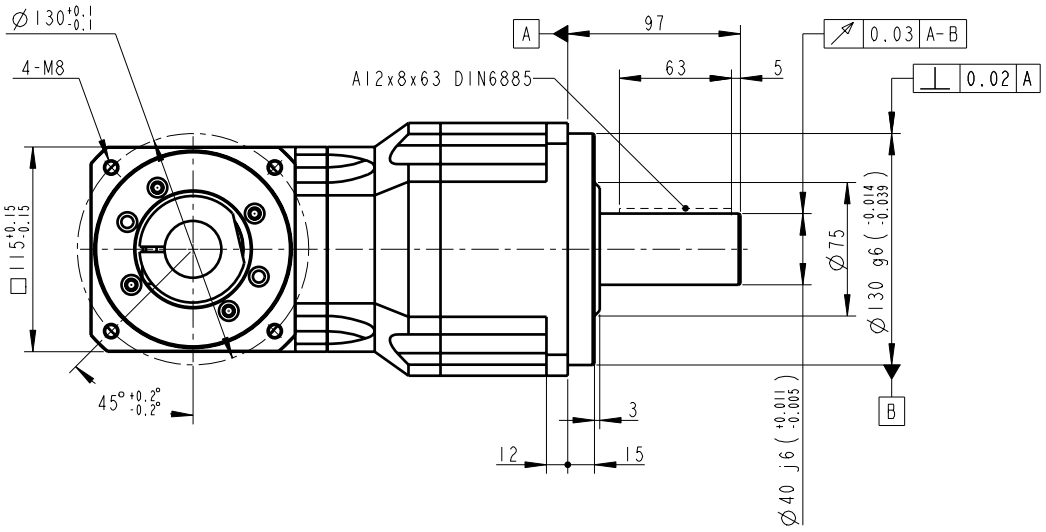

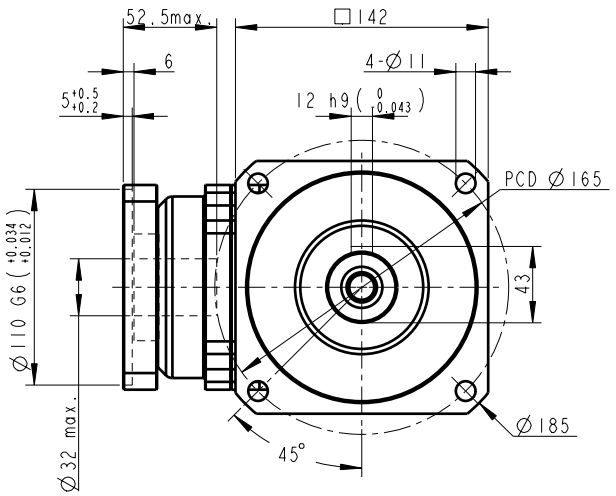

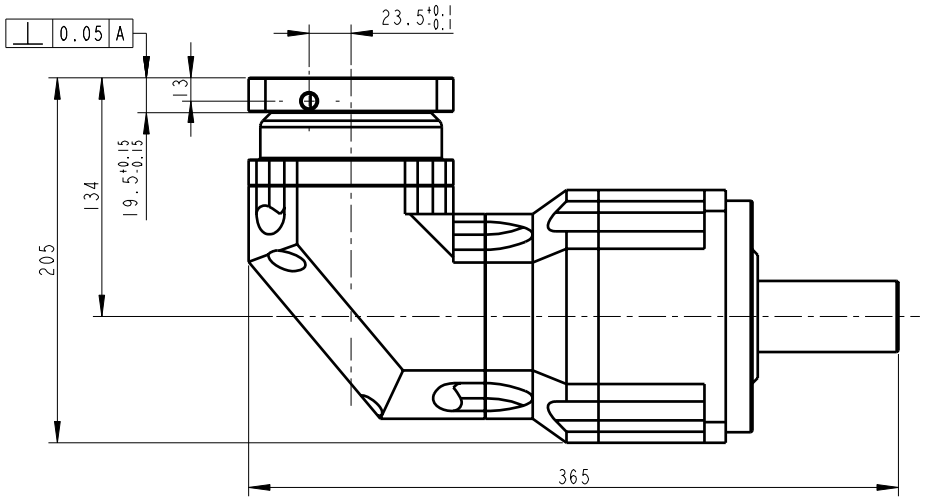

INERTIA: 6.25~6.84kg-cm^2
MASS: 27.5kg

SHAFT OPTION S1: SMOOTH OUTPUT SHAFT(STANDARD)
SHAFT OPTION S2: OUTPUT SHAFT WITH KEYWAY
MICRO BACKLASH<= 4 arcmin
REDUCED BACKLASH<= 7 arcmin
STANDARD BACKLASH<= 9 arcmin

BUSHING SUPPLIED WHEN MOTOR SHAFT DIAMETER SMALL THAN Ø32

Old Part No. ABR1422-P4140301

PART NO. ABR1422-P0403401001 ABR142-2, AD-P110-M115-1		APEX DYNAMICS, INC.
APPROVALS	DATE	TITLE ABR142 2 STAGES, RATIO= 25~200 AND MOTOR FLANGE MOUNTING
DRAWN Cindy	20-Aug-08	DWG NO. ABR1422-P0403401001
CHECKED		
APPROVED		SIZE A0 / SCALE 1:1 / REV 3.0