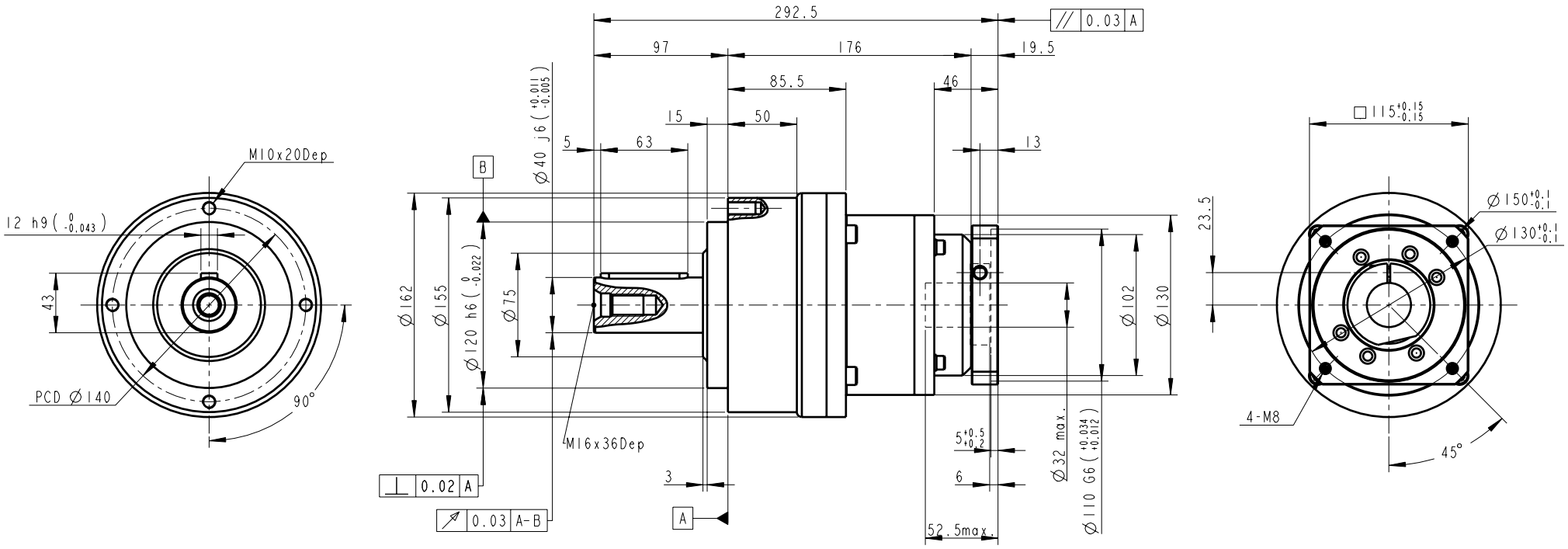

INERTIA: 2.57~2.71kg-cm^2
MASS: 17kg

BACKLASH: <=12 arcmin

BUSHING SUPPLIED WHEN MOTOR SHAFT DIAMETER SMALL THAN Ø32

Old Part No. AE1552-P4140301

PART NO. AE1552-P0403401001 AE090-2, AD-P110-M115-1		APEX DYNAMICS, INC.
APPROVALS	DATE	TITLE AE155 2 Stages, Ratio=15~100 AND MOTOR FLANGE MOUNTING
DRAWN Nadia		
CHECKED		DWG NO. AE1552-P0403401001
APPROVED		SIZE A0 / SCALE 1:1 / REV 1.0