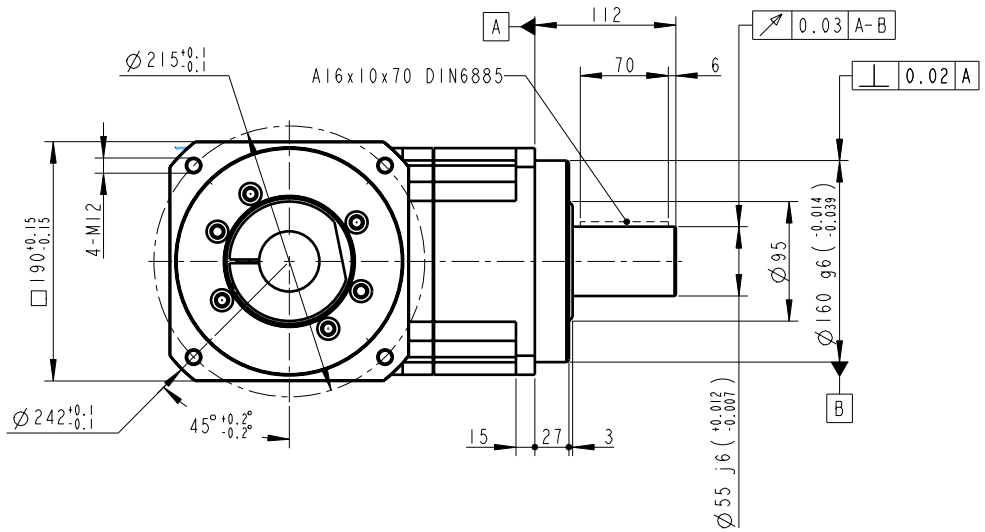

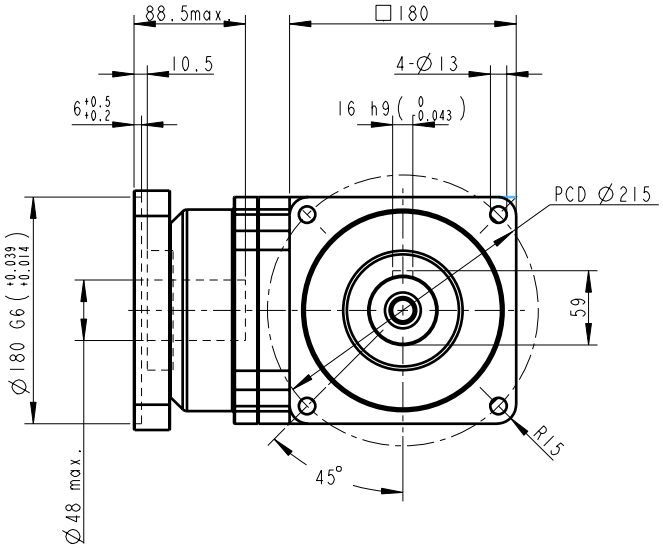

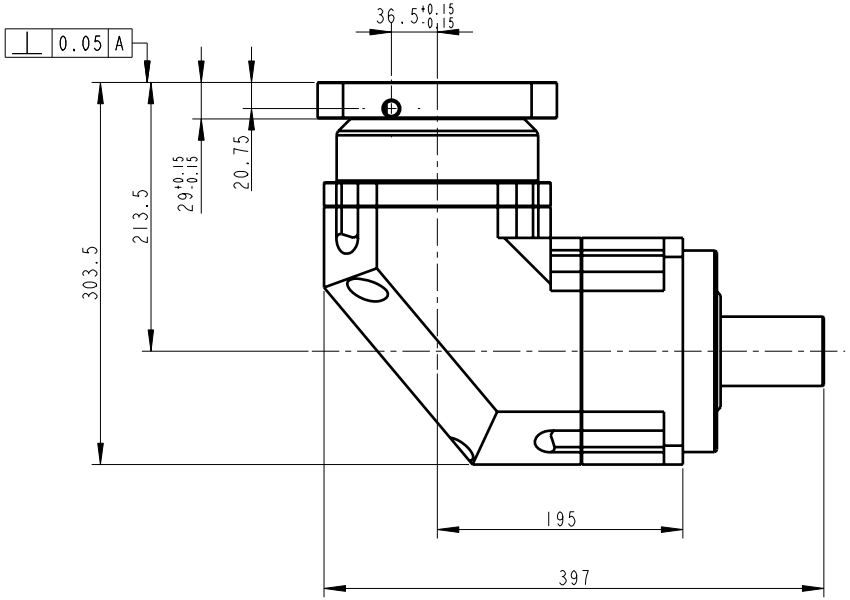

INERTIA: 65.6~68.9kg-cm^2
MASS: 50kg

SHAFT OPTION S1: SMOOTH OUTPUT SHAFT(STANDARD)
SHAFT OPTION S2: OUTPUT SHAFT WITH KEYWAY
MICRO BACKLASH<= 2arcmin
REDUCED BACKLASH<= 4arcmin
STANDARD BACKLASH<= 6arcmin

***BUSHING SUPPLIED WHEN MOTOR SHAFT DIAMETER SMALL THAN Ø48

Old Part No. AFR1801-P4160301

PART NO. AFR1801-P0403600601 AFR180-1, AD-P200-M190-1		APEX DYNAMICS, INC.			
APPROVALS	DATE	TITLE AFR180 1 STAGE, RATIO= 3~20 AND MOTOR FLANGE MOUNTING			
DRAWN Cindy	15-Sep-08				
CHECKED		DWG NO. AFR1801-P0403600601			
APPROVED			SIZE 2A0	SCALE 1:1	REV 3.0